# REVERSIBLE BRUSHLESS DC RIGHT-ANGLED GEARMOTOR

**Model Number:**

# MMP BL87-435F-120V GRA81-04.3

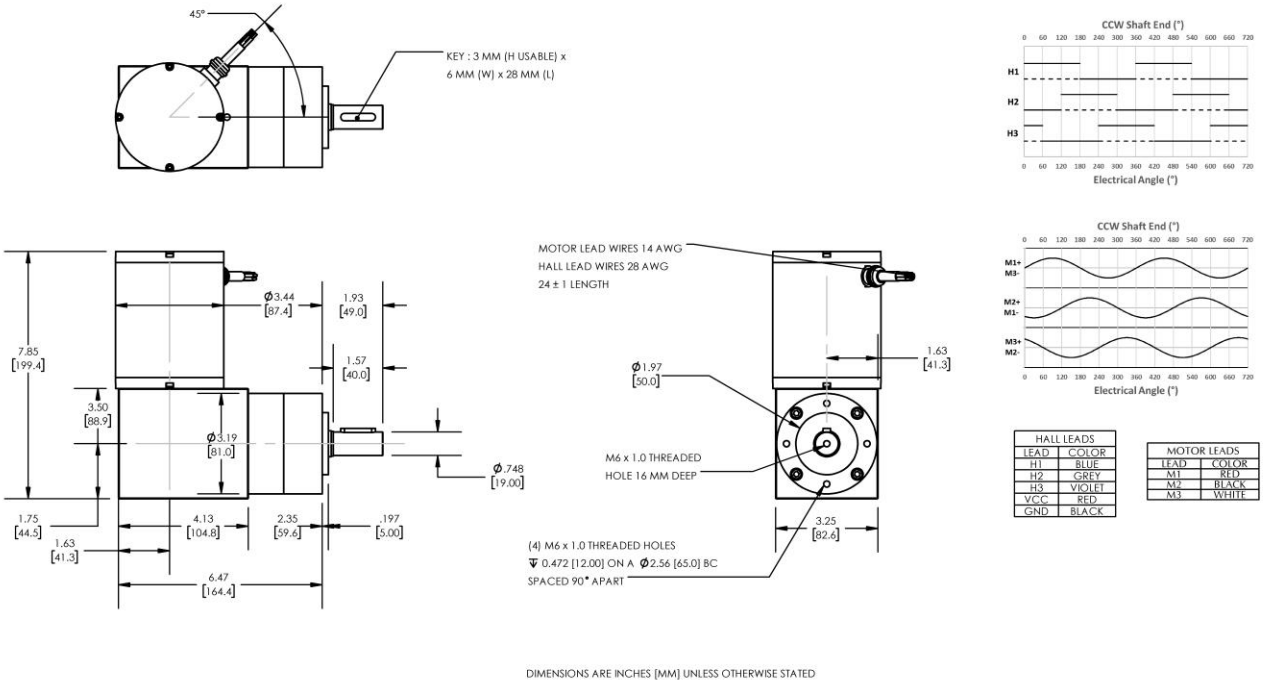


| HALL LEADS | |
|---|---|
| LEAD | COLOR |
| H1 | BLUE |
| H2 | GREY |
| H3 | VIOLET |
| VCC | RED |
| GND | BLACK |

| MOTOR LEADS | |
|---|---|
| LEAD | COLOR |
| M1 | RED |
| M2 | BLACK |
| M3 | WHITE |

| PLANETARY GEARMOTOR OUTPUT PARAMETERS: | VALUE | UNITS | TOLERANCE |
|---|---|---|---|
| Gearhead Ratio (exact) | 4.28 : 1 | | |
| Gearhead Shaft Output Speed (at full-load) | 1109 | RPM | MAX |
| Gearmotor Rated Continuous Torque | 41 | In-Lbs | MAX |
| Gearmotor Rated Peak Torque | 157++ | In-Lbs | ----- |
| Gearhead Standard Backlash | 30 | Arc Minutes | MAX |
| Gearhead Efficiency | 80% | ----- | ----- |
| Output Shaft Radial Load Capacity | 90 | Lbs | MAX |
| Output Shaft Axial Load Capacity | 18 | Lbs | MAX |
| Gearmotor Total Weight | 15 | Lbs | MAX |

++ All Peak Torque values are dependent upon duty. Contact our sales office for details.

| DC MOTOR PERFORMANCE PARAMETERS: | VALUE | UNITS | TOLERANCE |
|---|---|---|---|
| Rated DC Voltage | 120 | DC VOLTS | ----- |
| Rated Continuous Current | 7.5 | AMPERES | ----- |
| No-Load Speed | 5854 | RPM | MAX |
| Rated Speed | 4748 | RPM | +/- 15% |
| Rated Continuous Power Out | 677 | WATTS | +/- 15% |
| Rated Continuous Torque | 193 | OZ-IN | ----- |
| Peak Torque (motor only) | 734 | OZ-IN | ----- |
| No-Load Current | 0.55 | AMPERES | MAX |
| Back EMF Constant (Ke) | 20.5 | V/KRPM | +/- 10% |
| Torque Constant (Kt ) | 27.7 | OZ-IN/AMP | +/- 10% |
| DC Armature Resistance | 3.02 | OHMS | +/- 15% |
| Armature Inductance | 1.80 | mH | +/- 15% |
| Armature temperature | 155 | DEG. C | MAX |

NOTES:

- ENCODER & BRAKE OPTIONS AVAILABLE – FOLLOW THIS LINK FOR DETAILS
- NEMA MOUNTING FLANGE OPTION AVAILABLE – FOLLOW THIS LINK FOR DETAILS